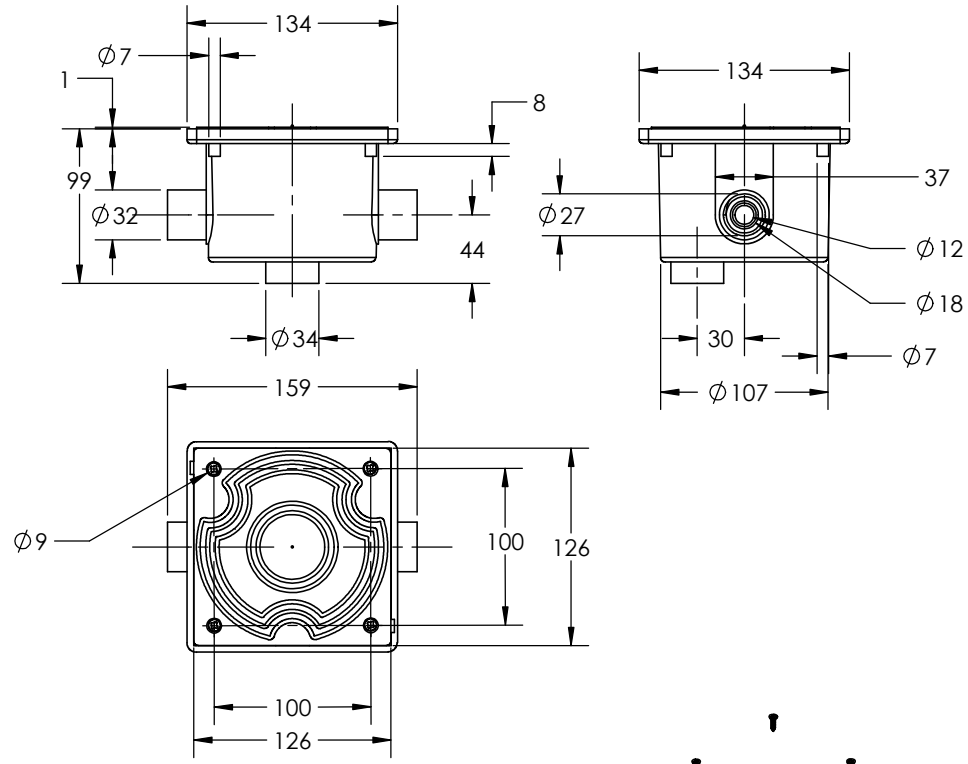

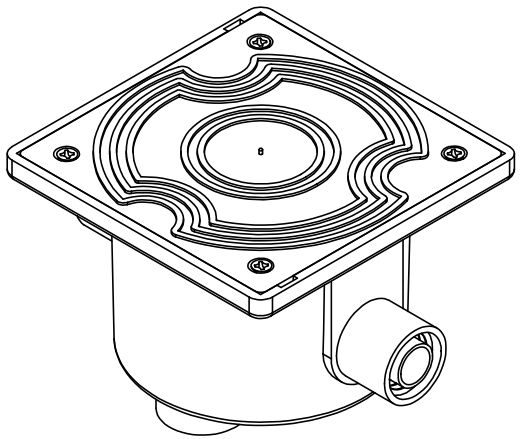

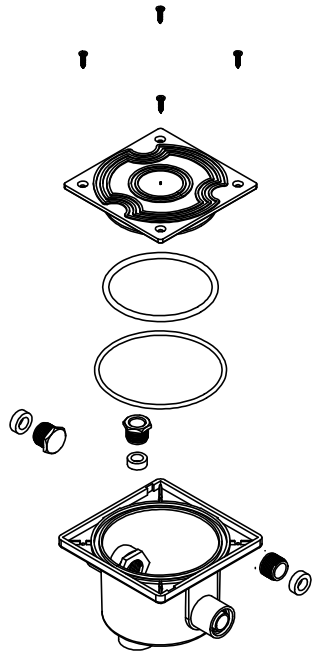

Product Name.

Water Proof Connection Box